Square-Photoelectric Sensor NPN BQ26-H2000N Ditection Distance 10-2000mm

Our Product Introduction

Basic Information

Place of Origin:	Guangdong,China
Brand Name:	KRONZ
Certification:	CE
Model Number:	BQ26-H2000N
Minimum Order Quantity:	1
Price:	Negotiable
Packaging Details:	Polybag packing
Delivery Time:	5-8 working days
Payment Terms:	T/T,Western Union,MoneyGram
Supply Ability:	10000 pieces per month

Product Specification

Ditection Distance:	10-2000mm
Reaction Time:	1ms
Control Output:	NPN&PNP: Open Collector Output 24V, Max.100mA(only For Main Unit) Residual Voltage:1V
Output Option:	LIGHT-ON/DARK-ON Is Controlled By White Wire. Connecting The White Wire To GND Is DARK ON, Connecting The Brown Wire Or Leaving It Unconnected Is LIGHT ON
Output Function:	1 Output Port,equipped With Short Circuit Protection And Auto. Anti-interference Function
Light Source:	Red 635NM 4-element LED
Indicator:	Green LED Indicator Indicates Power Indicator, Red LED Indicates Output
Power Consumption:	Standard Mode: Max. 300mW, Max. Voltage: 24V

for more products please visit us on connector-industrial.com

Our Product Introduction

for more products please visit us on connector-industrial.com

Product Description

The **BQ26-H2000N** is a high-performance square-type photoelectric sensor engineered for medium- to long-range object detection. Featuring a **detection distance of 10 to 2000mm**, this sensor offers a wide sensing range in a compact housing, making it suitable for a variety of industrial automation applications.
With **NPN open collector output** and robust ambient light immunity, the BQ26-H2000N ensures stable and reliable operation even in challenging environments. It is easy to install with standard mounting options and includes a visible status indicator for convenient alignment and status monitoring.

Features:

Detection Distance: 10mm to 2000mm (adjustable depending on target reflectivity)
Output Type: NPN open collector for sinking input control systems
Sensor Type: Diffuse reflective (no need for external reflector or receiver)
Compact Square Housing: Durable and space-efficient design
Fast Response Time: Ideal for high-speed object detection
Operation Indicator: LED for visual status confirmation
Ambient Light Immunity: Performs reliably in variable lighting conditions
Wide Voltage Range: Compatible with standard 12–24V DC control systems
Easy Installation: Standard mounting holes for brackets or panels

Technical Parameters

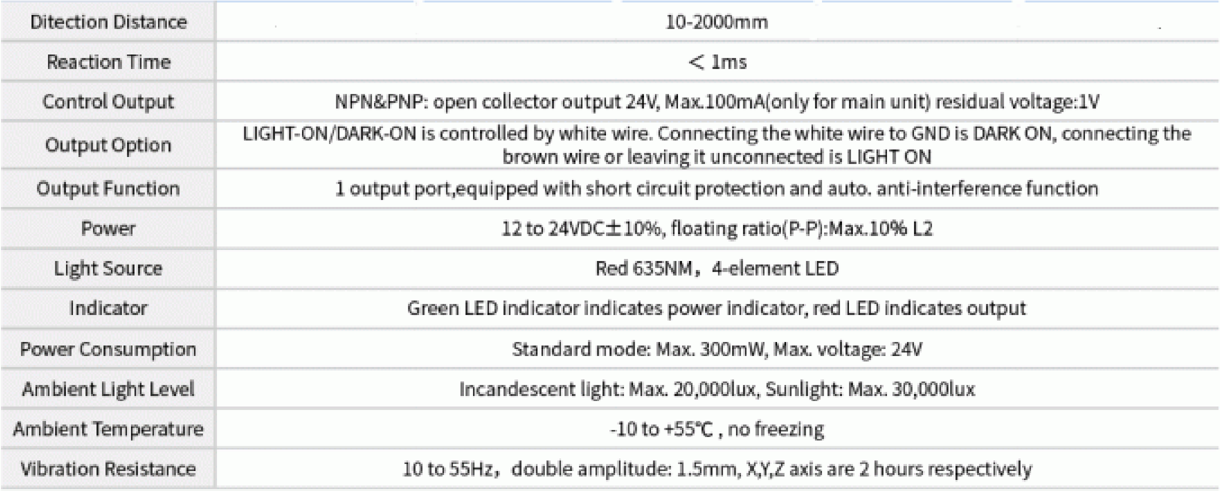

Ditection Distance	10-2000mm
Reaction Time	< 1ms
Control Output	NPN&PNP: open collector output 24V, Max.100mA(only for main unit) residual voltage:1V
Output Option	LIGHT-ON/DARK-ON is controlled by white wire. Connecting the white wire to GND is DARK ON, connecting the brown wire or leaving it unconnected is LIGHT ON
Output Function	1 output port,equipped with short circuit protection and auto. anti-interference function
Power	12 to 24VDC±10%, floating ratio(P-P):Max.10% L2
Light Source	Red 635NM，4-element LED
Indicator	Green LED indicator indicates power indicator, red LED indicates output
Power Consumption	Standard mode: Max. 300mW, Max. voltage: 24V
Ambient Light Level	Incandescent light: Max. 20,000lux, Sunlight: Max. 30,000lux
Ambient Temperature	-10 to +55℃ , no freezing
Vibration Resistance	10 to 55Hz，double amplitude: 1.5mm, X,Y,Z axis are 2 hours respectively

Product Images

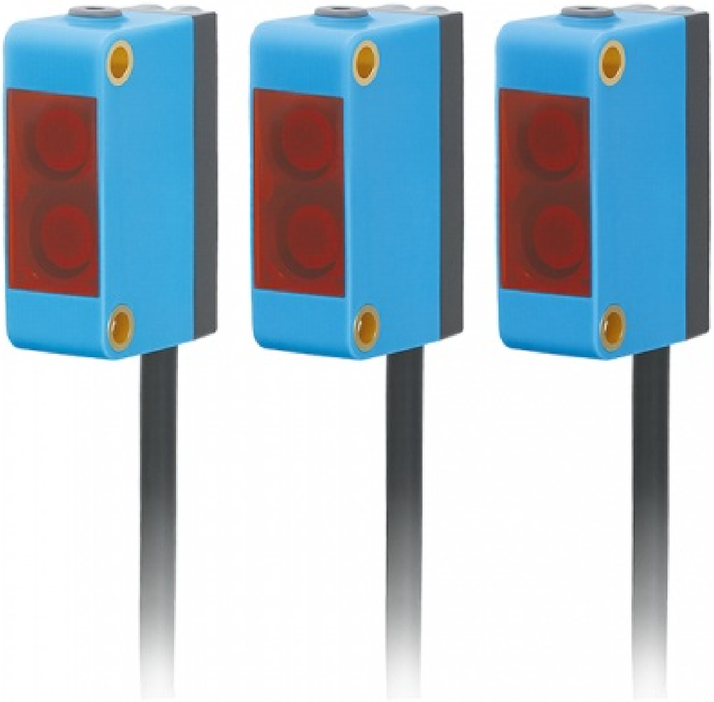

Product Dimension Drawing

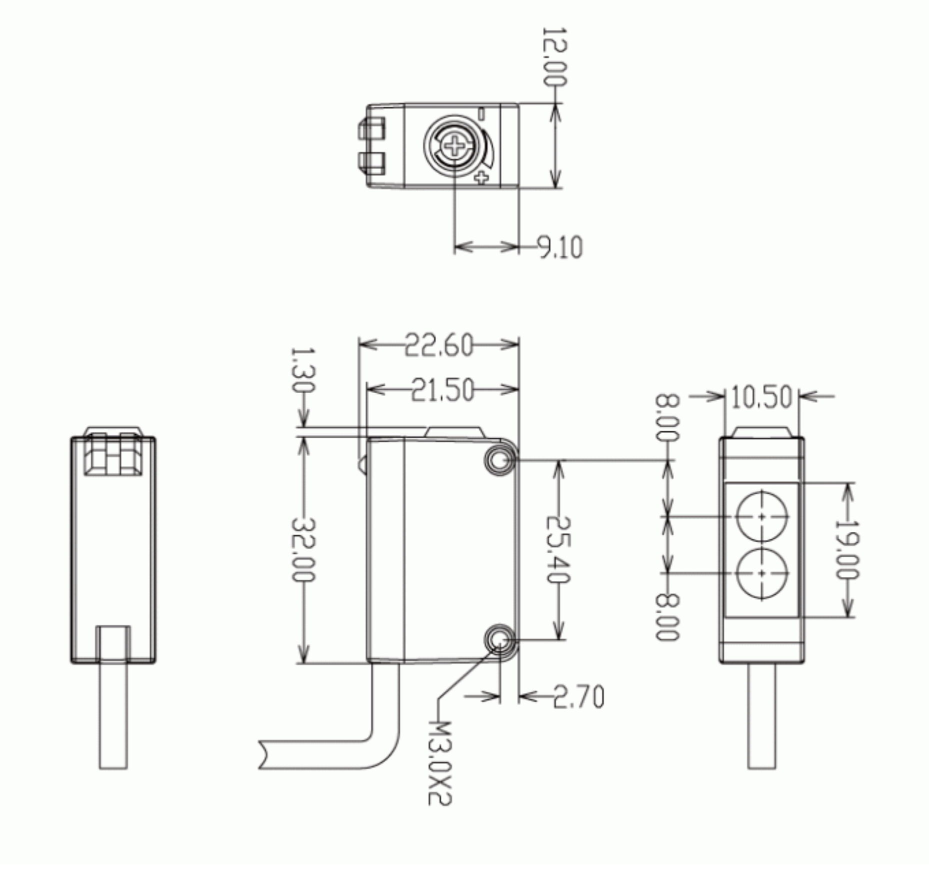
12.00
9.10
22.60
21.50
1.30
32.00
25.40
8.00
8.00
10.50
19.00
2.70
M3.0X2

Company Profile

ABOUT US

KRONZ is a manufacturing enterprise located in Zengcheng District, Guangzhou City. We focus on providing customers with high-efficiency industrial automation solutions and related industrial products. After many years of innovation and development, KRONZ has complete product processing equipment and a professional team who are proficient in various automation technologies.

In order to improve the quality of products and production efficiency, we continue to introduce advanced production equipment and technology, strengthen investment in research and development. At present, our main products include Industrial Connectors、 Inductive Sensors、 Capacitive Sensors、 Photoelectric Sensors、 Ultrasonic Sensors、 Industrial power supplies、 Industrial fieldbus、 RFID recognition systems、 Industrial Ethernet Switches

We not only produce the orders of standard products, but also have ability to make customize production based on customer design drawings or samples.

Adhering to the principle of mutual benefit, we provide our customers with competitive prices , and perfect after-sales service. Kronz's products have been sold in multiple countries, have won the trust and praise of customers. KRONZ expect to collaborate with you.

OUR FACTORY

Kronz (Guangzhou) Electronics Co., Ltd.
克朗兹（广州）电子有限公司

克朗兹（广州）电子有限公司

Certifications

Verification of Conformity

CE

Verification of Conformity

CE

Verification of Conformity

CE RoHS

Verification of Conformity

CE

Verification of Conformity

CE

Verification of Conformity

CE

Logistics and Payment

PayPal WESTERN UNION VISA T/T

TNT UPS SF EXPRESS 顺丰速运

FedEx Express EMS DHL

1. Samples and small orders can be shipped with fast shippment method, by air and by express. Bulk order will ship by sea,by air,by train,by truck etc.

2.We also can send the goods to your agent warehouse.

3. If you need any more shipping method, please feel free to contact with us.

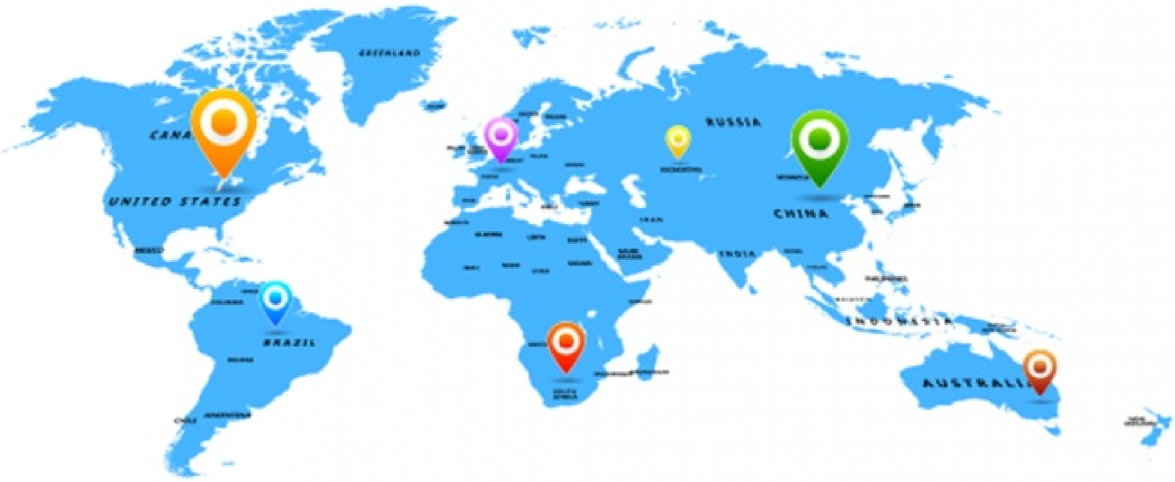
GREENLAND
CANA
UNITED STATES
RUSSIA
CHINA
INDIA
BRAZIL
INDONESIA
AUSTRALIA

Note:

Due to the wide range of our products, we cannot list all product pictures and corresponding product parameters. If you have other needs, please communicate with me. We can provide supplementary information and technical support.
We Are Happy to Serve You.

KRONZ Kronz (guangzhou) Electronics Co., Ltd.

☎ +8618924160375 sales02@kronz.cn connector-industrial.com

6th Floor, B602 Building, No.10, Rong Jing 2nd Road, Yu Shan Guo Ji, Yong Ning Street, Zeng Cheng District,
Guangzhou, P.R.China